SL POWER CINT1175 SERIES

175 Watts Single Output
Industrial Grade

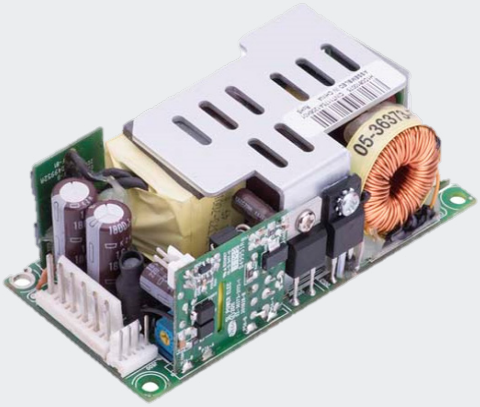

Industrial

Advanced Energy's SL Power CINT1175 family offering in high density single output open-frame AC/DC power supplies. Approved to EN/CSA/IEC/UL62368-1. The CINT1175 operates at universal input rang of 90 to 264 VAC and wide temperature range -10°C to +70°C, devering full rated output power up to +50°C. In addition, these models feature Power Fail, DC OK and Inhibit signals.

AT A GLANCE

Total Power

175 Watts

Input Voltage

90 to 264 VAC

# of Outputs

Single

RoHS CE

SPECIAL FEATURES

- 2"W x 4"L x 1.3"H Size
- For 1U Applications
- Universal Input 90 to 264 VAC
- 175 W w/air, 120 W Convection Cooled
- 12 V Fan Output
- 90% Efficiency Typical at Full Load
- Meets Level V Efficiency Requirements
- Power Fail/Output Good/Inhibit Signal
- Approved to EN/CSA/IEC/UL62368-1
- ROHS Compliant
- 3 Years Warranty

SAFETY

- EN/CSA/IEC/UL62368-1

©2026 Advanced Energy Industries, Inc.

ELECTRICAL SPECIFICATIONS

Input	
Input Range	90 to 264 VAC, 47 to 63 Hz, 1Ø 127 to 370 VDC
Turn-On Input Voltage	82.7 VAC, norminal
Turn-Off Input Voltage	67.0 VAC, norminal
Power Factor	>0.9
Switching Frequency	PFC: 65 kHz typical
Inrush Current	50 A max., cold start @ 264 VAC input
Input Current	115 VAC: 2 A, 230 VAC: 1 A
Input Fuses	4A, 250 VAC fuses provided on all models
Earth Leakage Current	<350 µA @ 264 VAC, 60 Hz, NC
Efficiency	90% typical at 115 VAC
Isolation Voltage	Input/Ground: 1800 VAC Input/Output: 4000 VAC Output/Ground: 1500 VAC
Output	
Maximum Power	175 W continuous with 200 LFM airflow, 120 W convection cooled, see chart for specific voltage model ratings
Ripple and Noise	See chart
Line Regulation	+/-1%, See chart
Load Regulation	+/-3%, See chart
Total Regulation	+/-3%, See chart
Minimum Load	Not required
Output Voltage	See chart
Adjustment Range	+/-5% from nominal
Transient Response	50% load step, Δi/Δt<0.2 A/µs. Max. voltage deviation is 3%
Auxiliary Signals	
AC Power Fail	During normal operations, stays HIGH. Signal goes LOW with 5 ms warning before loss of DC output from AC failure
Inhibit	Connect to inhibit pin to output common to inhibit the DC output
DC OK	Open collector logic signal goes and stays HIGH 100 ms to 500 ms after main output reaches regulation
Reliability	
MTBF	331,105 hrs at 175 W load, 110 VAC input, 25ºC ambient
Warranty	3 years
Protection	
Overvoltage Protection	Latch. OVP firing reduces output voltage to <50% of nominal in <50 mS. See chart for trip range.
Short Circuit Protection	Hiccup mode or latch
Thermal Protection	Automatic power shutdown at TC = 155ºC
Overload Protection	Hiccup mode

SYSTEM TIMING SPECIFICATIONS

Parameter	Min	Typ	Max	Unit
Turn On Time - 115 VAC inversely proportional to input voltage and thermistor temperature	-	-	2000	ms
Hold Up Time - 120 VAC @ 100% load	-	16	-	ms

EMI/EMC COMPLIANCE

Conducted Emissions	EN55011/22: Class B, FCC Part 15, Subpart B, Class B
Radiated Emissions	EN55011/22: Class A, FCC Part 15, Subpart B, Class A w/6db Margin
Line Harmonic Emissions	EN61000-3-2, Class A, B, C, D
Voltage Fluctuations & Flicker	EN61000-3-3, Complies (dmax<6%)
Static Discharge Immunity	EN61000-4-2, 6kV Contact, 8kV air, Criteria A
Radiated RF EM Immunity	EN61000-4-3, 3 V/m, Criteria A
Electrical Fast Transients / Bursts	EN61000-4-4, 2 kV/5 Khz, Criteria A
Surges Line to Line (DM) and Line to Ground (CM)	EN61000-4-5, 1kV DM, 2kV CM, Criteria A
Conducted Disturbances Induced by RF Fields	EN61000-4-6, 3 Vrms, Criteria A
Power Frequency Magnetic Fields Immunity	EN61000-4-8, 3 A/m, Criteria A
Voltage Dips	EN61000-4-11: --0% Vin, 0.5 cycle --40% Vin, 5 cycle --70% Vin, 25 cycle Criteria A

ENVIRONMENTAL SPECIFICATIONS

Vibration	Operating: 0.003 g/Hz, 1.5 grams overall, 3 axes, 10 min/axis Non-operating: 0.026 g^2/Hz, 5 grams overall, 3 axes, 1 hr/axis
Shock	Operating: Half-sine, 20 gpk, 10 ms, 3 axes, 6 shocks total. Non-operating: Half-sine waveform, 40 gpk, 10 ms, 3 axes, 6 shocks total
Operating Temperature	-10°C to +70°C, -40°C start up, full load
Temperature Derating	Derate output power above 50°C to 50% at 70°C
Storage Temperature	-40°C to +85°C
Altitude	Operating: -500 to 10,000 ft. Non-operating: -500 to 40,000 ft
Relative Humidity	5% to 95%, non-condensing
Weight	210 g

ORDERING INFORMATION

Model Number	Output Voltage[1]	Output Current		Fan Output	Ripple & Noise[2]	Total Regulation	OVP Threshold[3]
		w/200 LFM air	Convection				
CINT1175A1206K01	12 V	14.6 A	10 A	12.0 V / 0.4 A	0.5% RMS, 1.2% pk-pk	+/-3%	14.0 ± 1.1 V
CINT1175A1506K01	15 V	11.7 A	8.0 A	12.0 V / 0.4 A	0.5% RMS, 1.0% pk-pk	+/-3%	18.5 ± 1.5 V
CINT1175A2406K01	24 V	7.3 A	5.0 A	12.0 V / 0.4 A	0.5% RMS, 1.2% pk-pk	+/-3%	28.0 ± 2.5 V
CINT1175A4806K01	48 V	3.6 A	2.5 A	12.0 V / 0.4 A	0.5% RMS, 1.0% pk-pk	+/-3%	55.0 ± 4.0 V
CINT1175A5606K01	56 V	3.1 A	2.1 A	12.0 V / 0.4 A	0.5% RMS, 1.0% pk-pk	+/-3%	59.0 ± 1.0 V

Notes:
1. Total convection output power is 120 W.
2. Measured with noise probe directly across output terminals, and load terminated with 0.1 µF ceramic and 10 µF low ESR capacitors.
3. Output adjustment on 56 V model will not exceed 56.2 V.

SAFETY

EN	EN62368-1
CSA	CAN/CSA-C22.2 No. 62368-1
IEC	IEC62368-1
UL	UL62368-1

PIN ASSIGNMENTS

Type	Connector	Pin #	Assignment	Mating Connector
INPUT	J100	1	AC Line	Molex: 09-50-3031 Pins: 08-52-0072
		2	Empty	
		3	AC Neutral	
GROUND	J101	0.187" X 0.020 FASTON TAB		Molex: 01-90020005
MAIN OUTPUT	J300	1	+Vout	AMP: 640250-6 Pins: 640252-1
		2	+Vout	
		3	+Vout	
		4	-Vout	
		5	-Vout	
		6	-Vout	
FAN OUTPUT[1]	J500	1	+12 V FAN	Molex: 1375820-2 Pins: 1375819
		2	+12 V RTN	
SIGNAL CONNECTOR	J600	1	Inhibit	Molex: 1375820-4 Pins: 1375819
		2	PF/DC OK	
		3	Common	
		4	Common	

Notes:
1. J500 provides a 12 V@0.4 A output to support a system cooling fan. The fan output is always available when AC input present, so it also can be used for a 12V standby output as desired.

MECHANICAL DRAWING

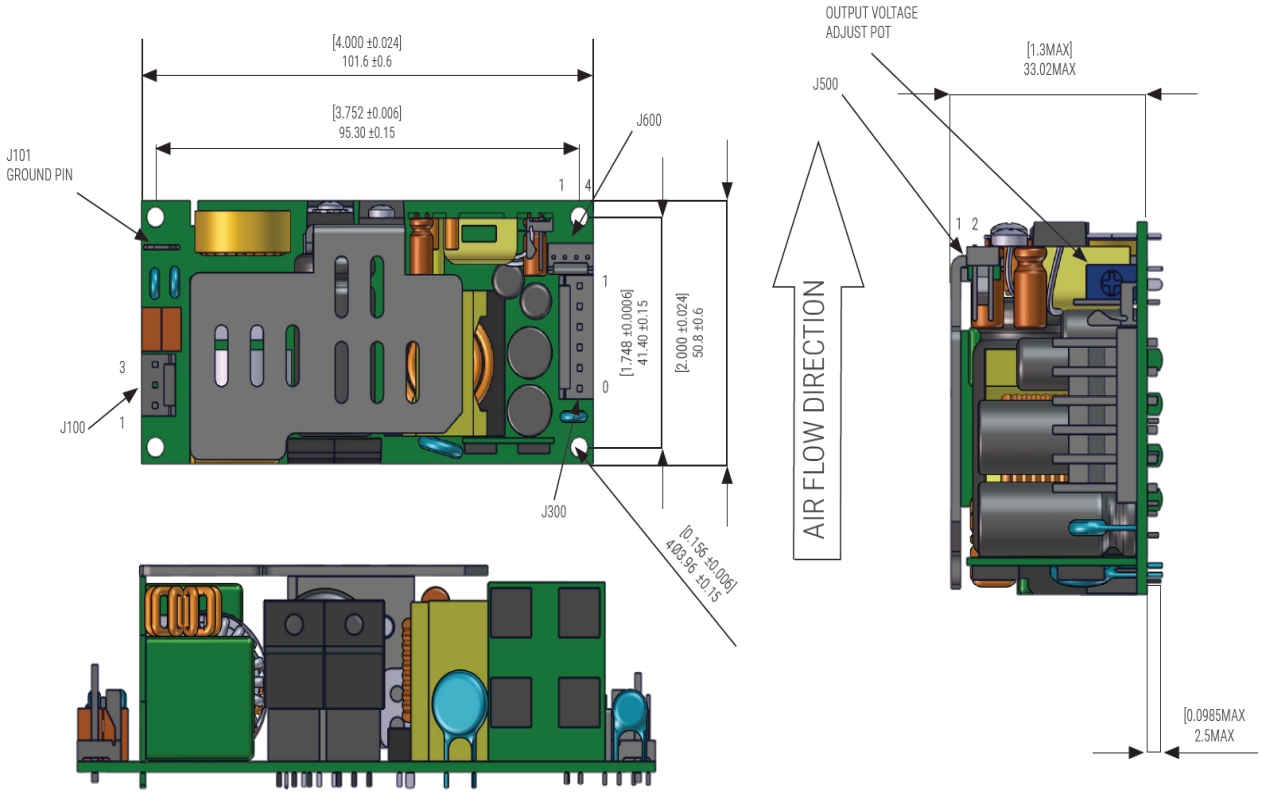

Notes:
1. All dimensions in mm (inches).
2. Dimensions: W: 2” x L: 4” x H: 1.3”.
3. Unit weight: 210 g.

AC POWER FAIL/DC OK AND INHIBIT SIGNALS - J600

AC Power Fail / DC OK
Power Fail / DC OK: During normal operation stays HIGH.
Goes HIGH 100 to 500 ms after main output, HIGH: 4 V to 5.2 V
Goes LOW with 5 ms warning before loss of output from AC failure, LOW: 0 to 0.8V

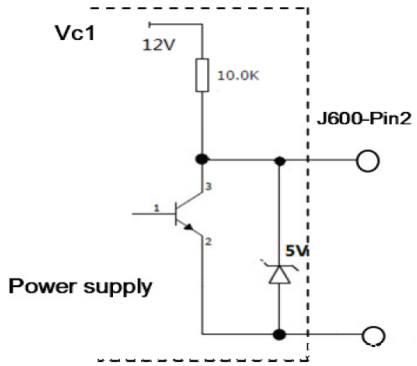

AC Power failure and DC OK signals use the same pin, so the signals can be used as follows
DC OK: Pin2 = HIGH & Pin1 = HIGH
AC Power Fail: Pin2 = LOW & Pin1 = LOW

Inhibit
Disable: Connect to output Common or pull down this pin below 10 V
Enable: Floating or HIGH. HIGH: 10.5 V to 12.6 V

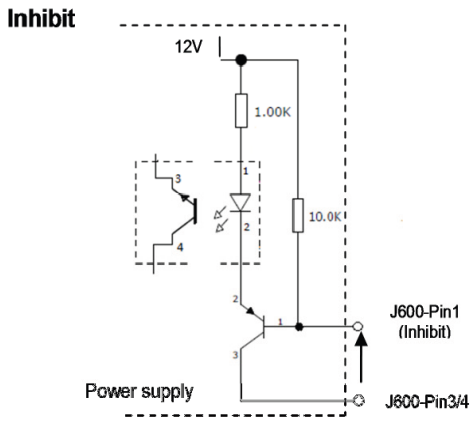

Timing

Timing Sequence

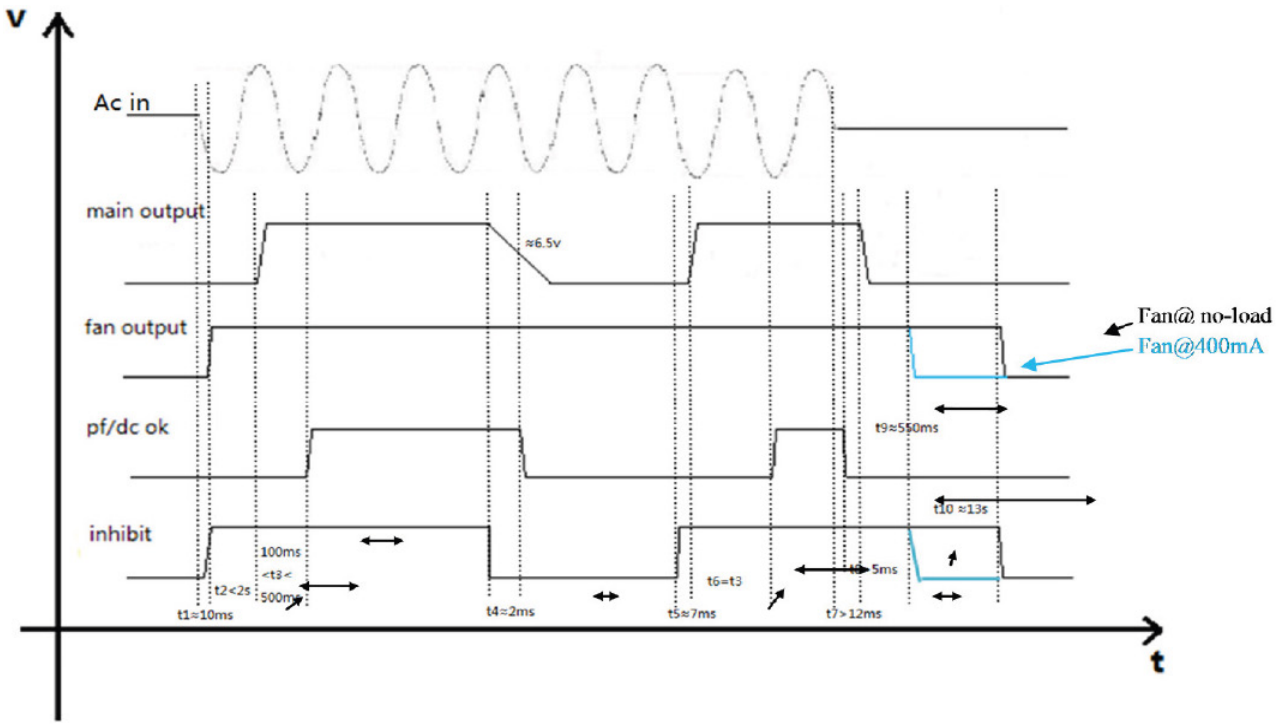

CHARACTERISTIC CURVES

Output vs Temperature

120 W convection cooled and 175 W continuous with 200 LFM airflow, derating output power to 50% at 70°C

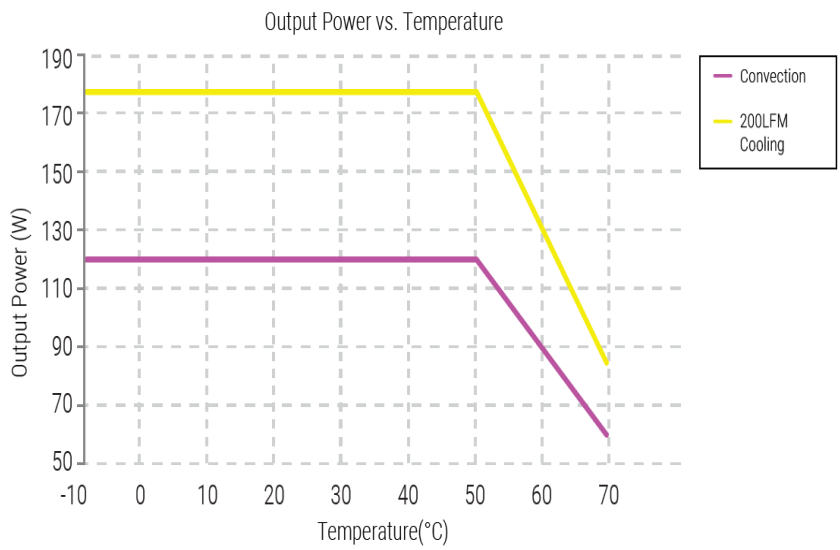

Efficiency vs. Loading

The high efficiency is achieved by using LLC technology, PFC topology minimizing switching losses. Synchronous SCHOTTKY or ultra-fast diode is used as rectifier in CINT1175 family because of high output voltage level.

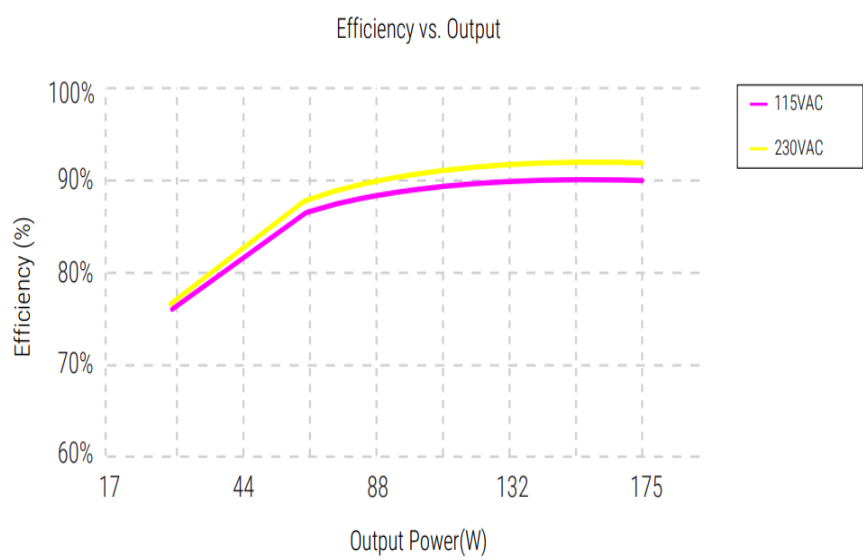

CHARACTERISTIC CURVES

Ripple & Noise

To verify that the output ripple and noise does not exceed the level specified in the product specification. Measured using a scope probe socket with 0.1µF ceramic and a 10µF electrolysis capacitor connected in parallel across it, BW limit with 20MHz.

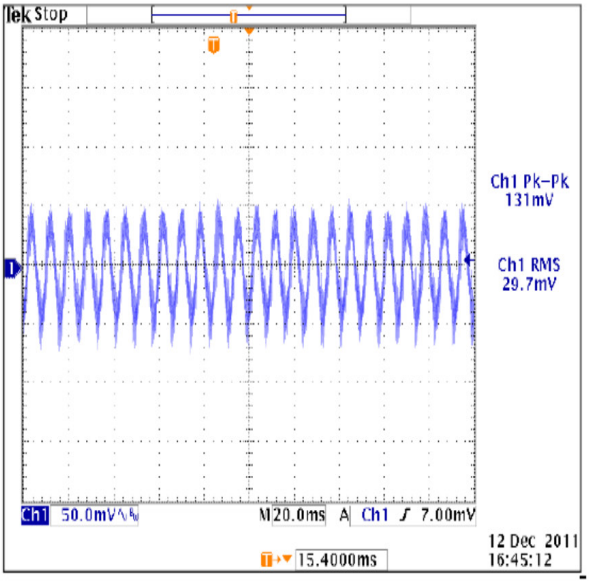

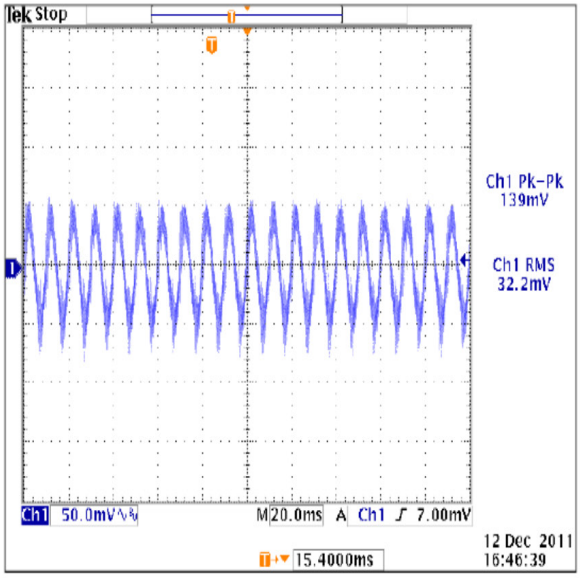

Output Transient Response

50% load step within the regulation limits of minimum and maximum load, dI/dt< 0.2A/µSec. Recovery time not specified as there is no laps in regulation with a 50% Load Step. Maximum voltage deviation is 3%. This test is performed on the main output only.

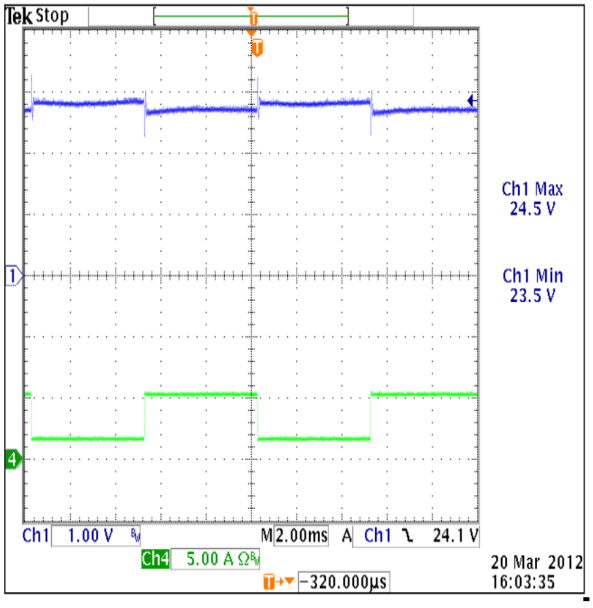

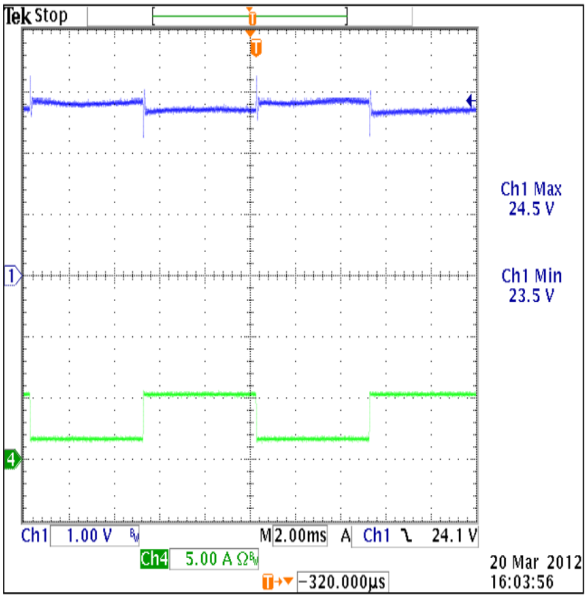

CHARACTERISTIC CURVES

Output Overload Characteristic

Supply shall protect itself against Overload conditions. The Power Supply shall recover from Overload Conditions without operator intervention.

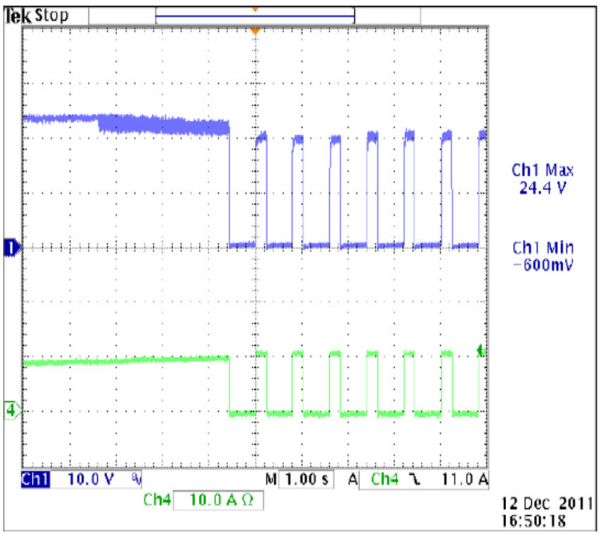

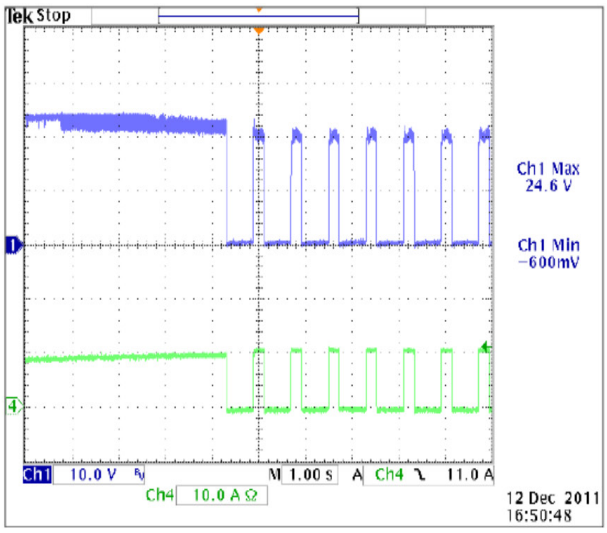

Output Overshoot

When supply is turned on/off or when the load is stepped 100%, the Power Supply Overshoot/Undershoot shall not exceed minimum or maximum of output voltage regulation.

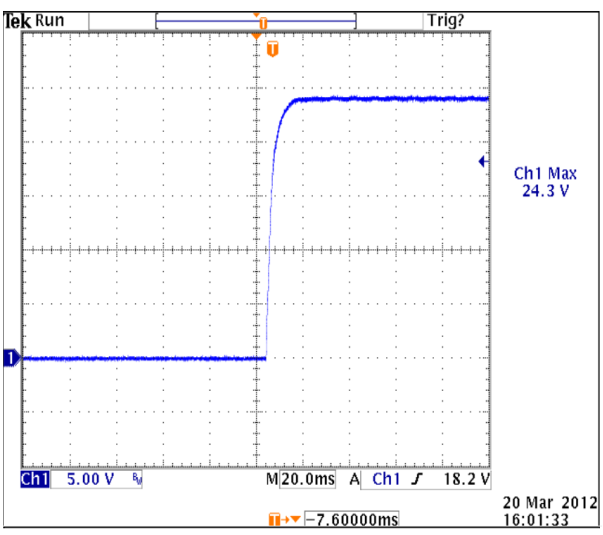

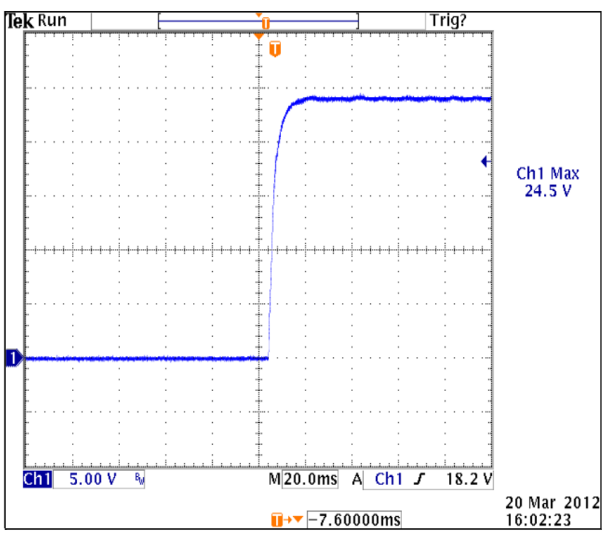

ABOUT ADVANCED ENERGY

Advanced Energy (AE) has devoted more than three decades to perfecting power for its global customers. AE designs and manufactures highly engineered, precision power conversion, measurement and control solutions for mission-critical applications and processes.

Our products enable customer innovation in complex applications for a wide range of industries including semiconductor equipment, industrial, manufacturing, telecommunications, data center computing, and medical. With deep applications know-how and responsive service and support across the globe, we build collaborative partnerships to meet rapid technological developments, propel growth for our customers, and innovate the future of power.

PRECISION | POWER | PERFORMANCE | TRUST

For international contact information,
visit advancedenergy.com.

powersales@aei.com (Sales Support)
productsupport.ep@aei.com (Technical Support)
+1 888 412 7832

Specifications are subject to change without notice. Not responsible for errors or omissions. ©2026 Advanced Energy Industries, Inc. All rights reserved. Advanced Energy®, and AE® are U.S. trademarks of Advanced Energy Industries, Inc.

ENG-CINT1175-03.16.26